BROOKHAVEN NATIONAL LABORATORY
I0978-1 REV - 11/08/99
FRONT MOTHERBOARD 8
LAYER 1 - SIGNALS

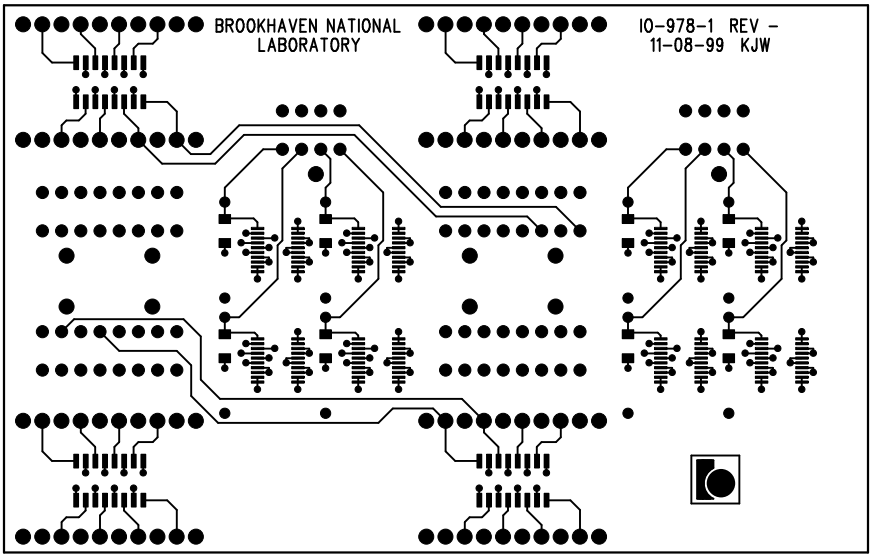

BROOKHAVEN NATIONAL LABORATORY
10978-1 REV - 11/08/99
FRONT MOTHERBOARD 8
LAYER 2 - GND PLANE

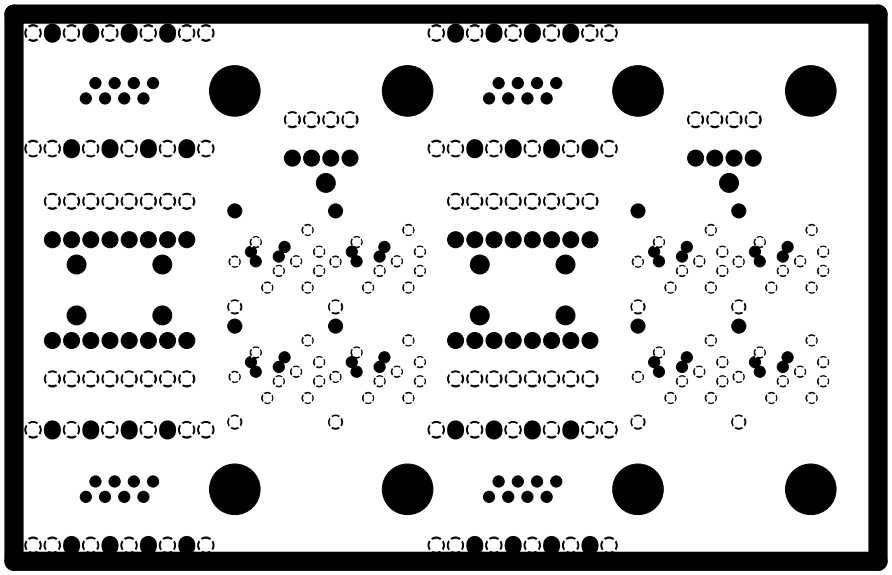

BROOKHAVEN NATIONAL LABORATORY
10978-1 REV - 11/08/99
FRONT MOTHERBOARD 8
LAYER 3 - SIGNALS

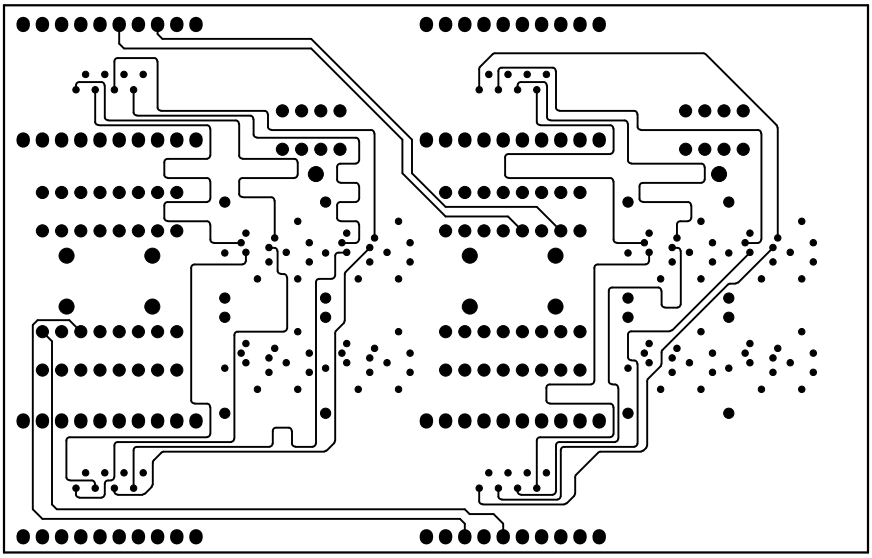

BROOKHAVEN NATIONAL LABORATORY
10978-1 REV - 11/08/99
FRONT MOTHERBOARD 8
LAYER 4 - GND PLANE

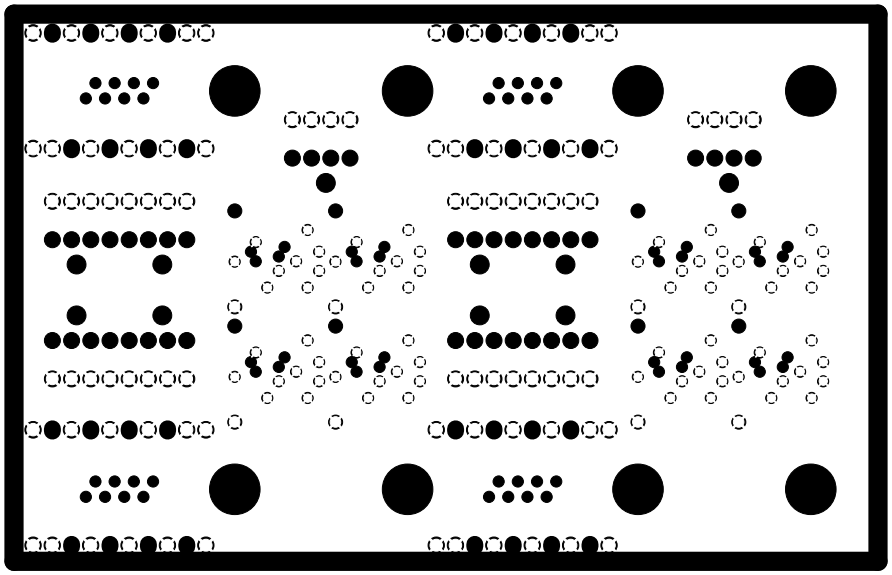

BROOKHAVEN NATIONAL LABORATORY
10978-1 REV - 11/08/99
FRONT MOTHERBOARD 8
LAYER 5 - SIGNALS

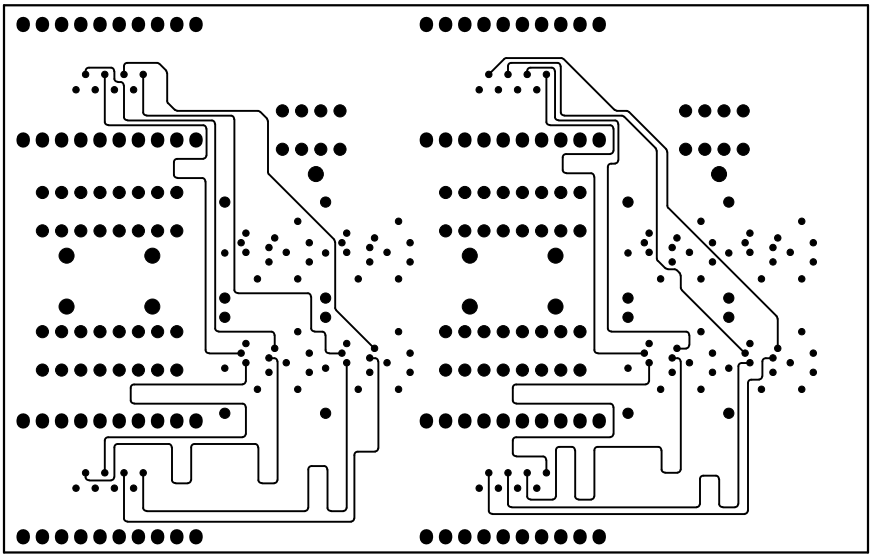

BROOKHAVEN NATIONAL LABORATORY
10978-1 REV - 11/08/99
FRONT MOTHERBOARD 8
LAYER 6 - GND PLANE

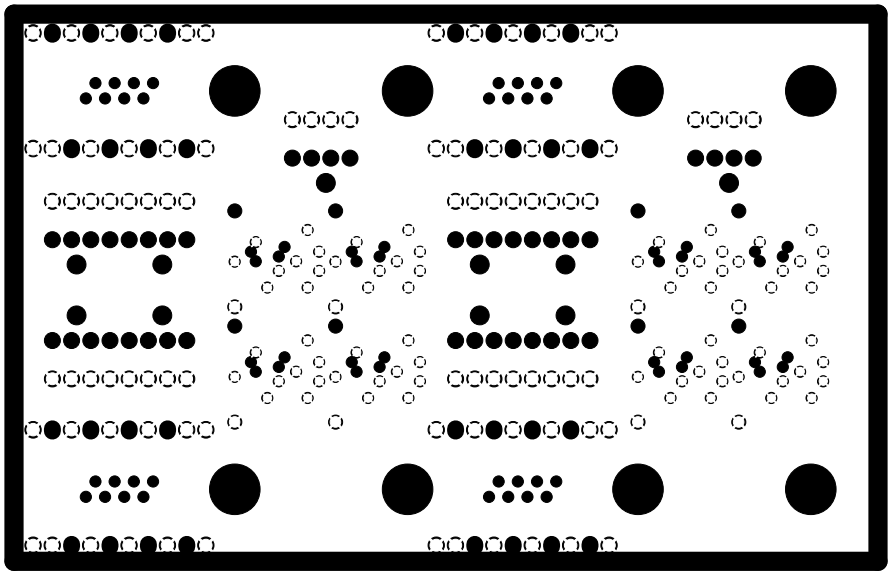

BROOKHAVEN NATIONAL LABORATORY
10978-1 REV - 11/08/99
FRONT MOTHERBOARD 8
LAYER 7 - SIGNALS

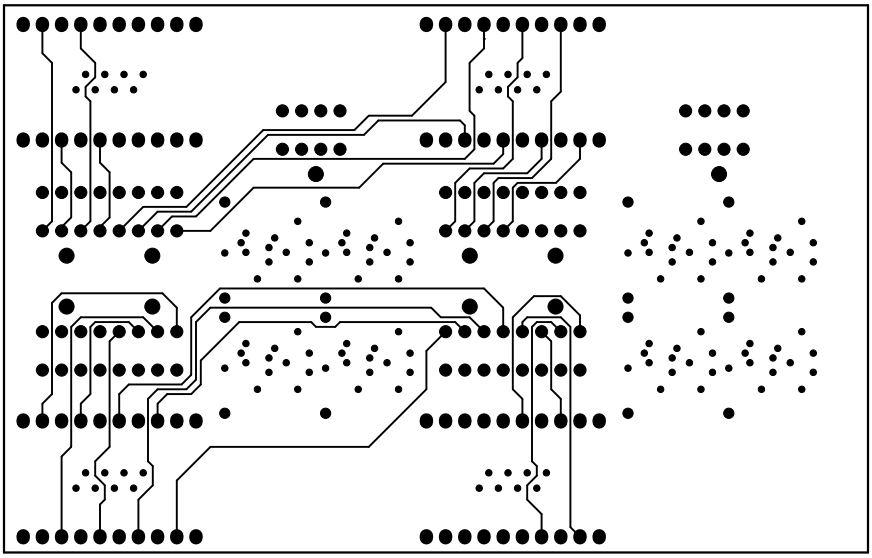

BROOKHAVEN NATIONAL LABORATORY
10978-1 REV - 11/08/99
FRONT MOTHERBOARD 8
LAYER 8 - GND PLANE

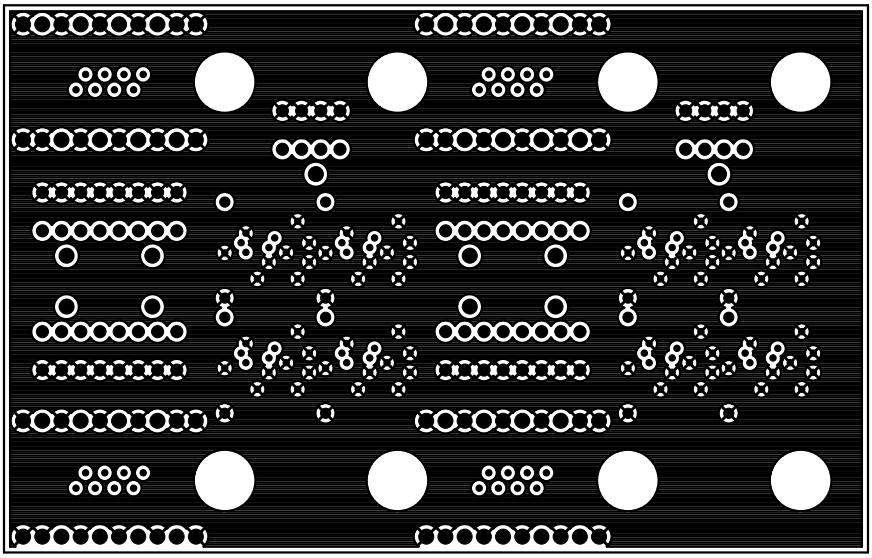

BROOKHAVEN NATIONAL LABORATORY
I0978-1 REV - 11/08/99
FRONT MOTHERBOARD 8
SOLDER MASK - TOP

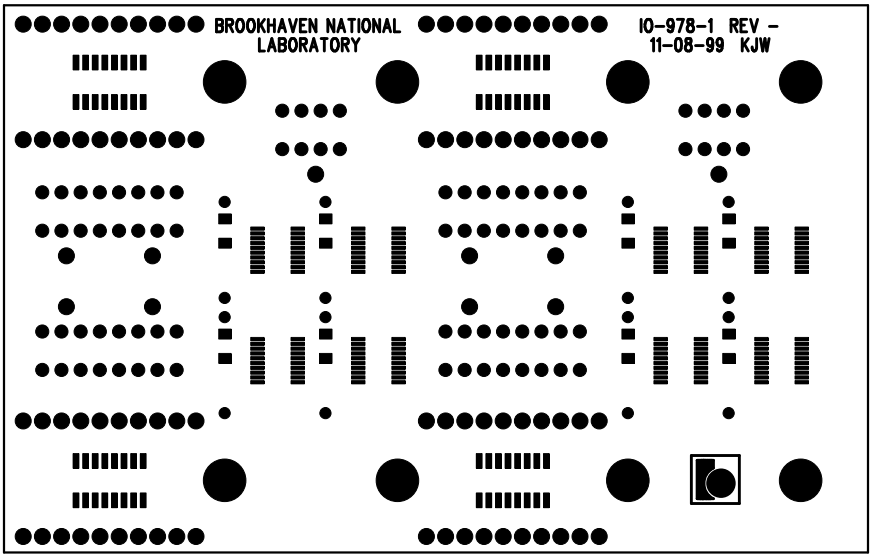

BROOKHAVEN NATIONAL LABORATORY
10978-1 REV - 11/08/99
FRONT MOTHERBOARD 8
SOLDER MASK - BOTTOM

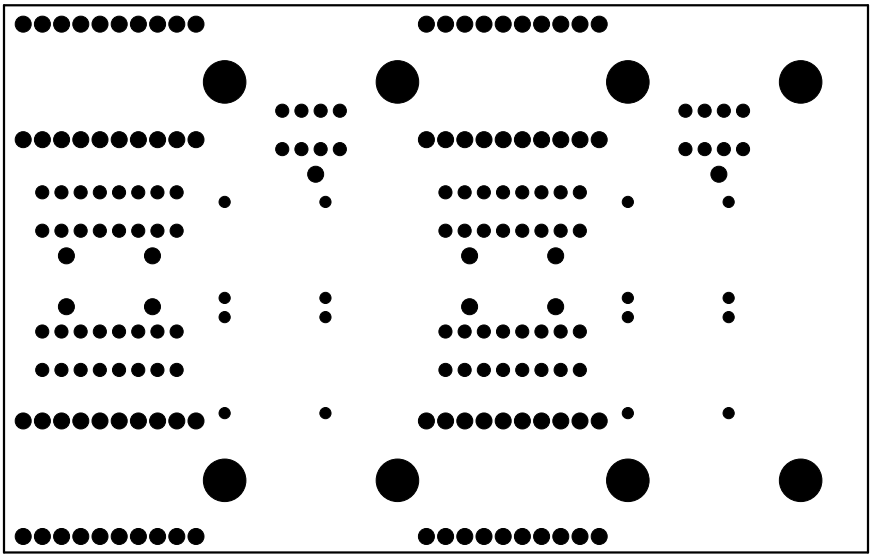

BROOKHAVEN NATIONAL LABORATORY
10978-1 REV - 11/08/99
FRONT MOTHERBOARD 8
COMPONENT PLACEMENT

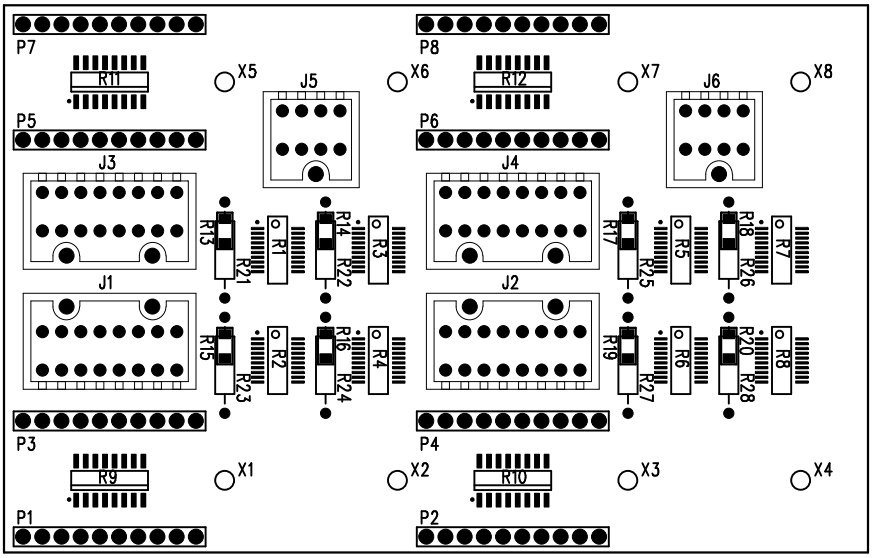

FSCM	DWG NO.	SH	REV

REVISIONS

ZONE	REV	DESCRIPTION	DATE	APPROVED

CONTROLLED IMPEDANCE REQUIREMENTS ARE 50 +/- 5 OHMS

FINISHED CONDUCTOR WIDTH IS .008" ON OUTER LAYERS AND .010" ON INNER LAYERS.
DIELECTRIC SEPARATION BETWEEN LAYERS IS SPECIFIED ON LAYER STACK-UP.

BROOKHAVEN NATIONAL LABORATORY
10978-1 REV - 11/08/99
FRONT MOTHERBOARD 8

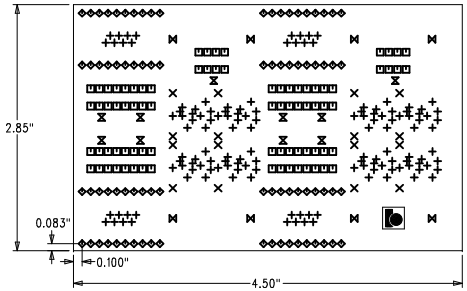

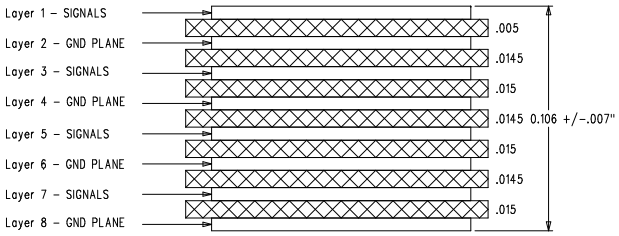

HOLE SIZE CHART

SYM	SIZE (AFTER PLATING)	QTY	PLATED
+	.015 +.003 -.003	136	YES
×	.031 +.003 -.003	16	YES
⊡	.043 +.003 -.003	80	YES
* ◇	.057 +.001 -.001	80	YES
⧖	.060 +.003 -.003	10	YES
* ⋈	.213 +.003 -.000	8	NO

FABRICATION NOTES (REV 1.0)

1) FINISHED TRACE LINE WIDTHS SHOULD MATCH SUPPLIED GERBER FILES, WITHIN +/-.001.

2) MATERIAL :
☒ FR4 (GF per MIL-P-13949) ☐ GPY (Gi per MIL-P-13949) ☐ OTHER

3) COPPER WEIGHT:
OUTER LAYERS : ☐ 1/4 oz. ☐ 1/2 oz. ☒ 1 oz. ☐ 2 oz.
INNER LAYERS : ☐ 1/4 oz. ☐ 1/2 oz. ☒ 1 oz. ☐ 2 oz. ☐ NONE

4) SOLDER MASK
☒ LIQUID PHOTOIMAGEABLE ☐ DRY FILM ☐ NONE
☒ OVER BARE COPPER ☐ OVER TIN LEAD ☐ OVER FULL BODY GOLD
☒ GREEN ☐ RED ☐ BLUE

5) OVERALL BOARD THICKNESS:
☐ 0.062" ☐ 0.093" ☐ 0.125" ☒ 0.106"
☐ +/- 0.005" ☒ +/- 0.007" ☐ +/- 0.010" ☐ OTHER

6) BARE BOARD ELECTRICAL TEST:
☐ TESTED TO GERBER DATA ☒ NO TEST REQUIRED

7) HOLE DIAMETER TOLERANCES ARE:
PLATED HOLES : +/- 0.003", NON PLATED HOLES : +/- 0.002".

8) SILK SCREEN USING EPOXY BASED INK.
☐ BOTH SIDES ☐ PRIMARY SIDE ☐ SECONDARY SIDE ☒ NONE
☐ WHITE ☐ YELLOW ☐ BLACK

9) MINIMUM ANNULAR RING:
☒ .003" FOR EXTERNAL LAYERS
☒ .002" FOR INTERNAL LAYERS

10) PLANE REGISTRATION:
+/- .005" TO TOP PLANE FOR ALL PLANES

11) MINIMUM PLATING THROUGH ALL HOLES IS:
.001" THICK COPPER

12) WARP AND TWIST:
NOT TO EXCEED .007" PER INCH ACROSS THE DIAGONAL

13) ACCEPTABILITY: (PER LATEST REVISION)
☒ IPC-A-600 ☐ IPC-RB-276 ☐ MIL-P-55110

14) SURFACE MOUNT PADS:
TOP LAYER: 240
BOTTOM LAYER: 0
TOTAL: 240

QTY REQD	FSCM NO.	PART OR IDENTIFYING NO.	NOMENCLATURE OR DESCRIPTION	MATERIAL SPECIFICATION

NEXT ASSY	USED ON
APPLICATION	

UNLESS OTHERWISE SPECIFIED
ALL DIMENSIONS ARE IN INCHES
TOLERANCES ARE:
FRACTIONS ± DECIMALS .XX= ± .010 .XXX=± .005 ANGLES ± 1/2°

MATERIAL

FINISH

DO NOT SCALE DRAWING

CONTRACT NO.

APPROVALS	DATE
DRAWN K WOLNIEWICZ	11-8-99
CHECKED	
ISSUED	

CUSTOMER
BROOKHAVEN NATIONAL LABORATORY
INSTRUMENTATION DIVISION
UPTON, NEW YORK

TITLE
ATLAS FRONT MOTHERBOARD 8
(FORMERLY 10-793-8)

SIZE	TICKET NO.	DWG NO.	REV.
C	T-1999-164	10-978-1	-

SCALE 1 : 1 SHEET 1 OF 1